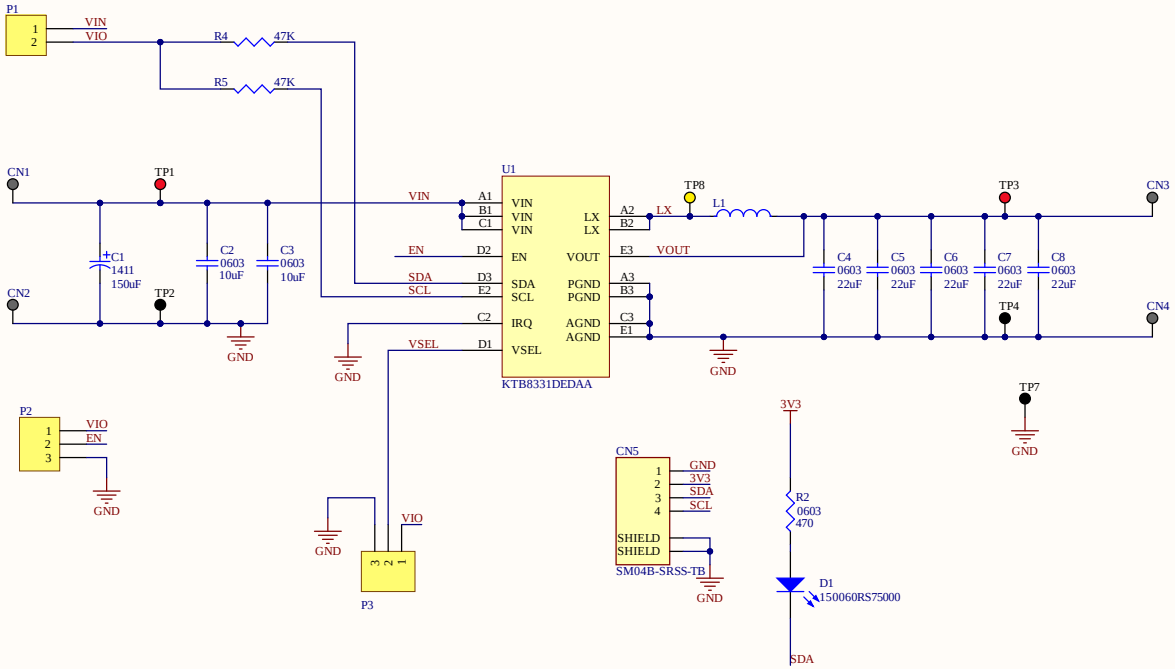

H1 H2 H3 H4

Title **KTB8331DEDAA-MMEV02**		*Kinetic Technologies* *6399 San Ignacio Ave* *Ste 250* *San Jose, Ca 95119* *USA*
Size: A3	Number: 1	Revision: 1.0
Date: 5/25/2023	Time: 3:04:02 PM	Sheet 1 of 1
Drawn By: Ricardo Portals		

SCH-0003-03

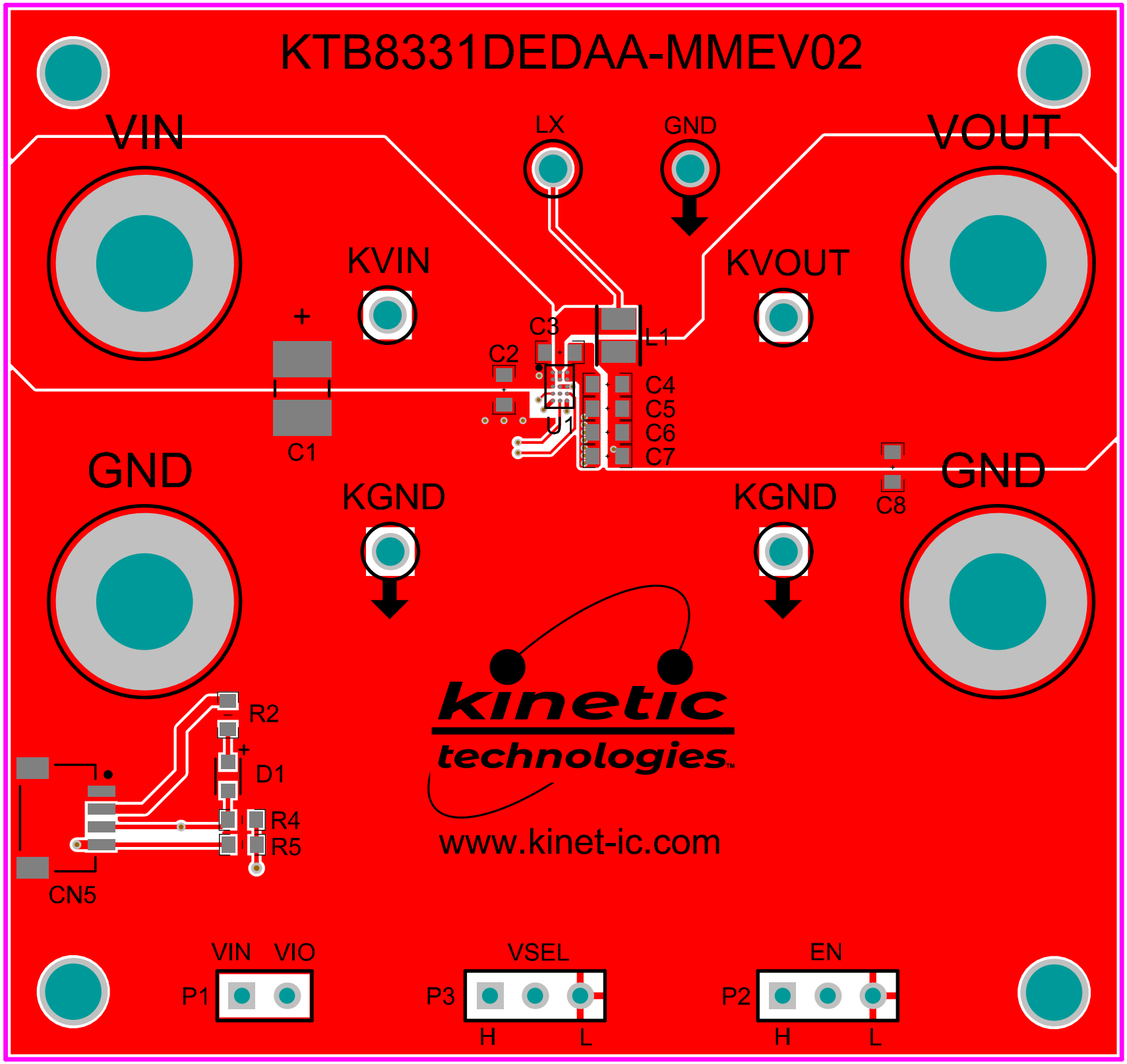
KTB8331DEDAA-MMEV02
VIN
LX
GND
VOUT
KVIN
KVOUT
C3
L1
C2
C4
C5
C6
C7
U1
C1
GND
KGND
KGND
C8
GND
R2
D1
R4
R5
CN5
kinetic
technologies
www.kinet-ic.com
VIN VIO
P1
VSEL
P3
H L
EN
P2
H L

SCH-0003-03

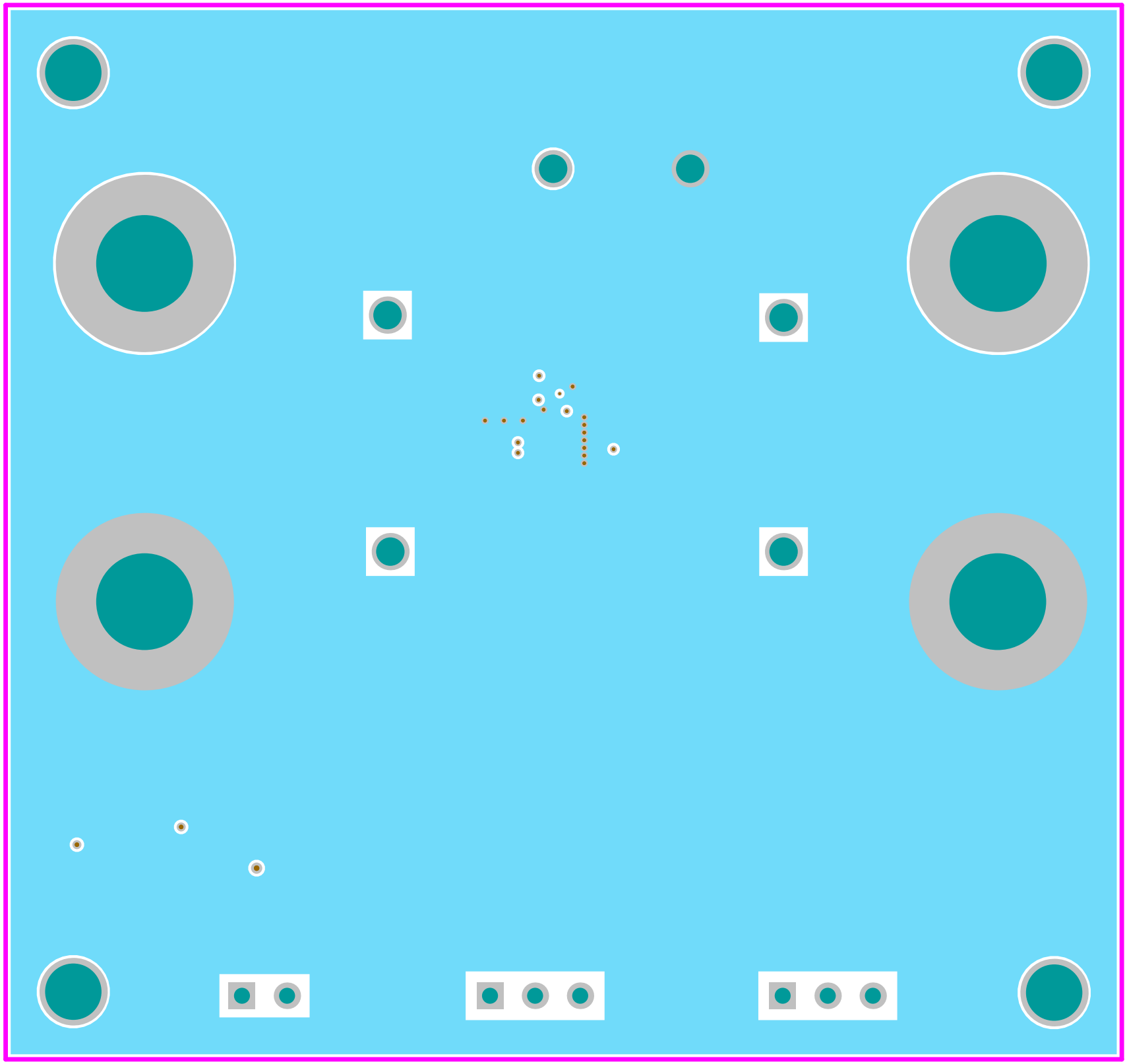

SCH-0003-03

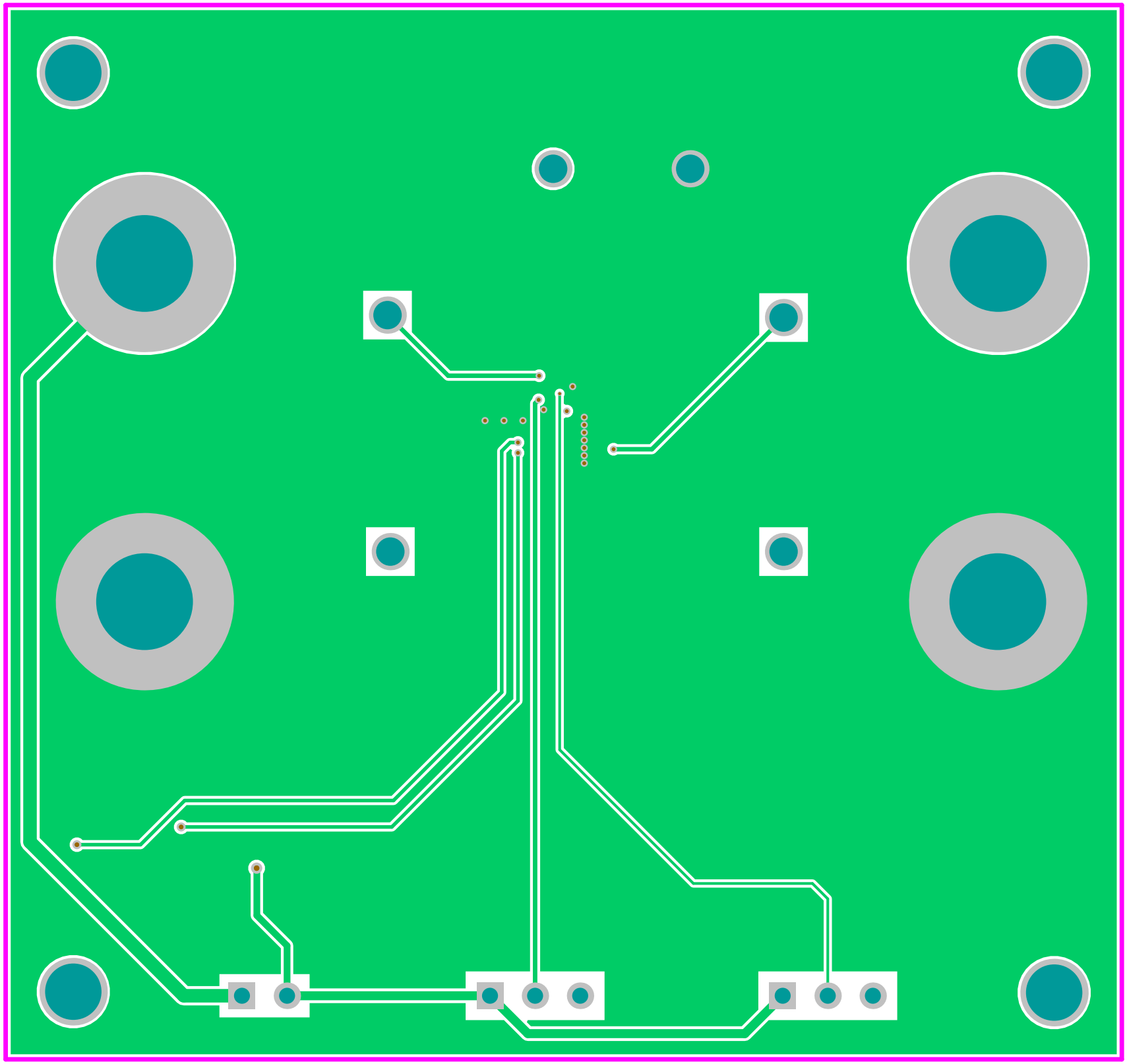

SCH-0003-03

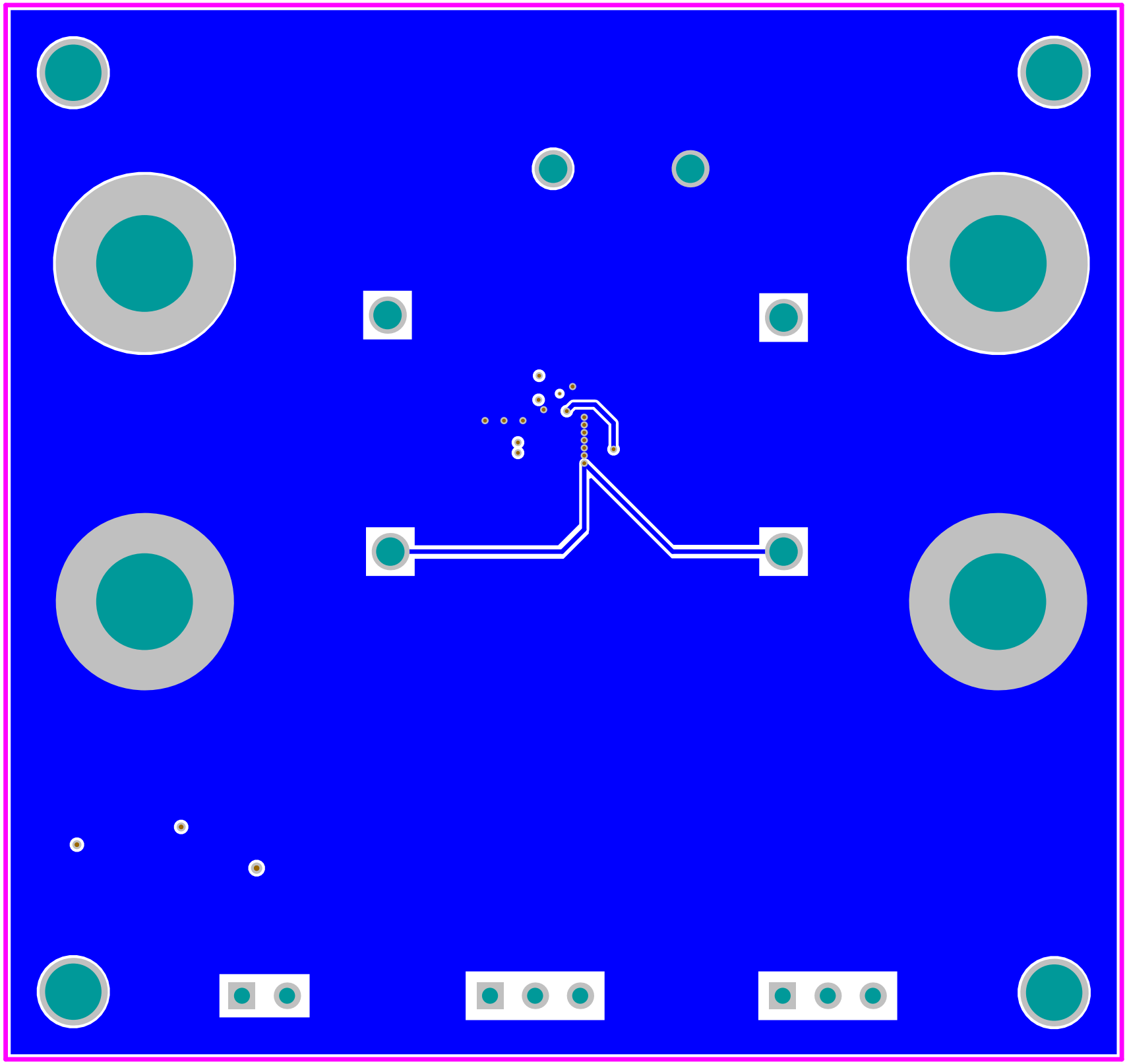

SCH-0003-03